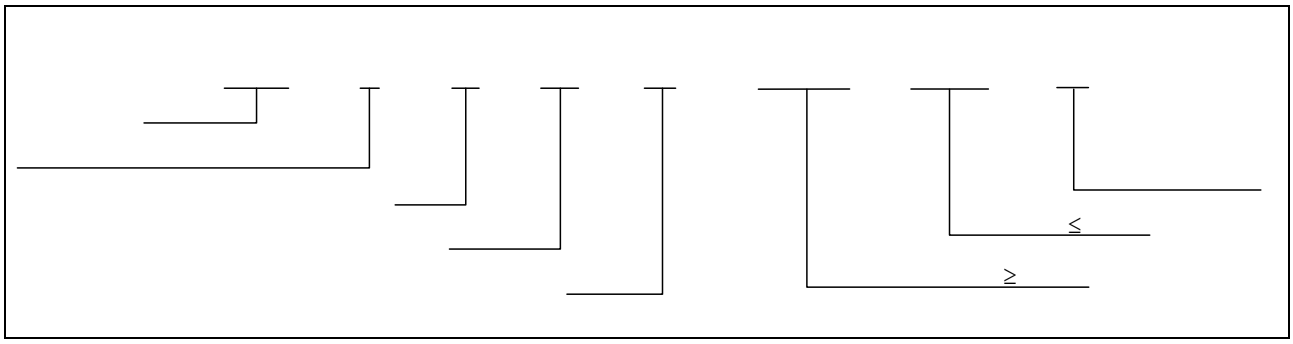


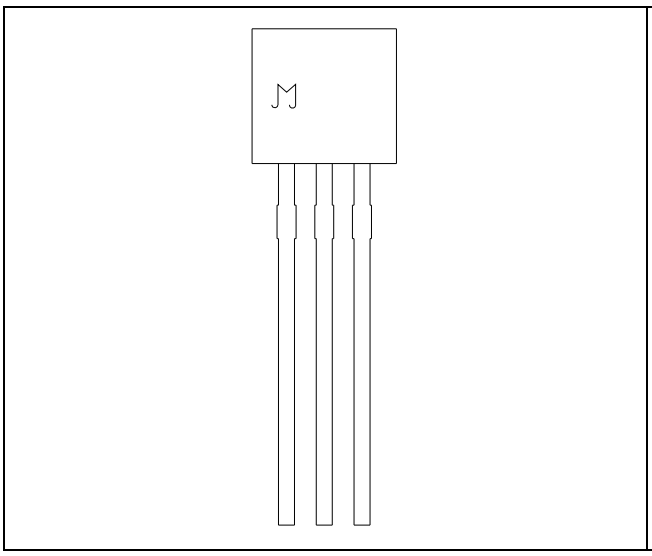

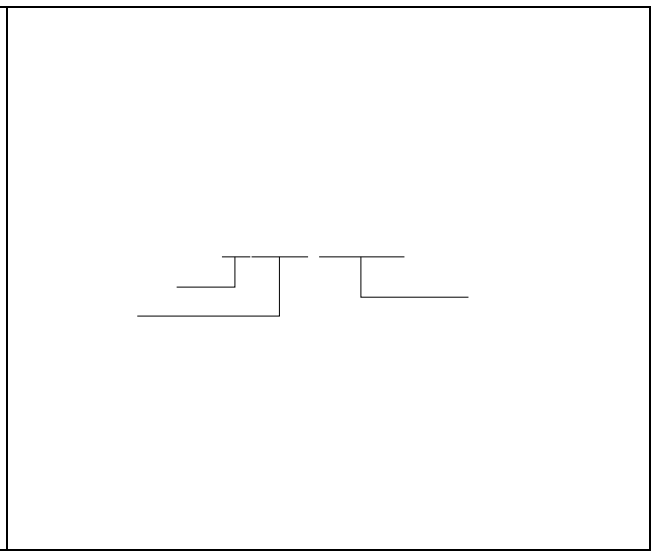

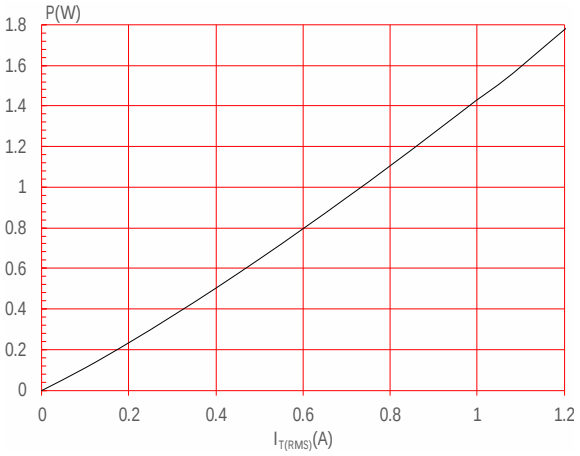
P(W)
1.8
1.6
1.4
1.2
1
0.8
0.6
0.4
0.2
0
0
0.2
0.4
0.6
0.8
1
1.2
I T(RMS)(A)

| | | | | | |
|---|---|---|---|---|---|
| | | | | | |
| | | | | | |
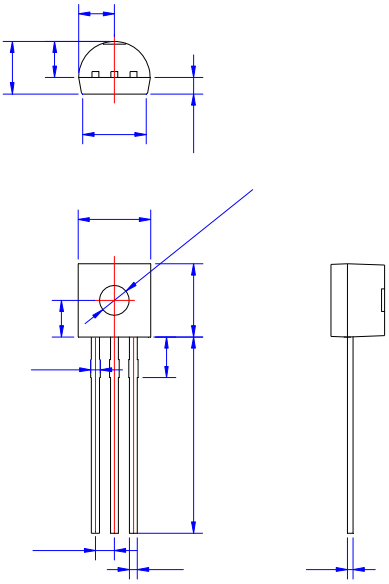
| | | |
|---|---|---|
| | | |
| | | |
| | | |